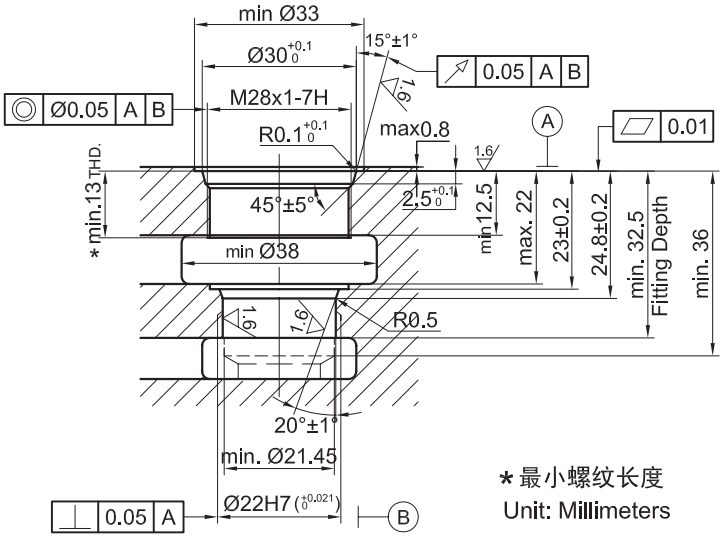

CAVITY:Rexroth-FC

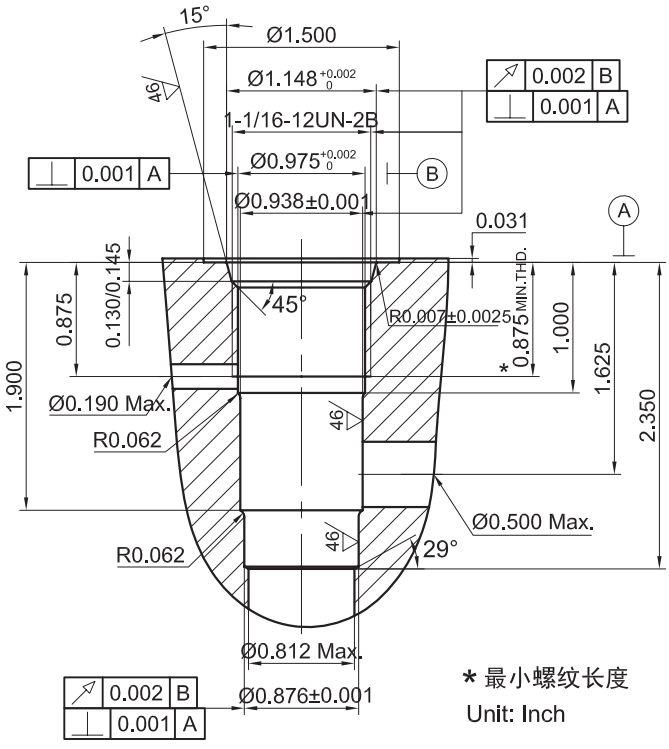

CAVITY:12-3S

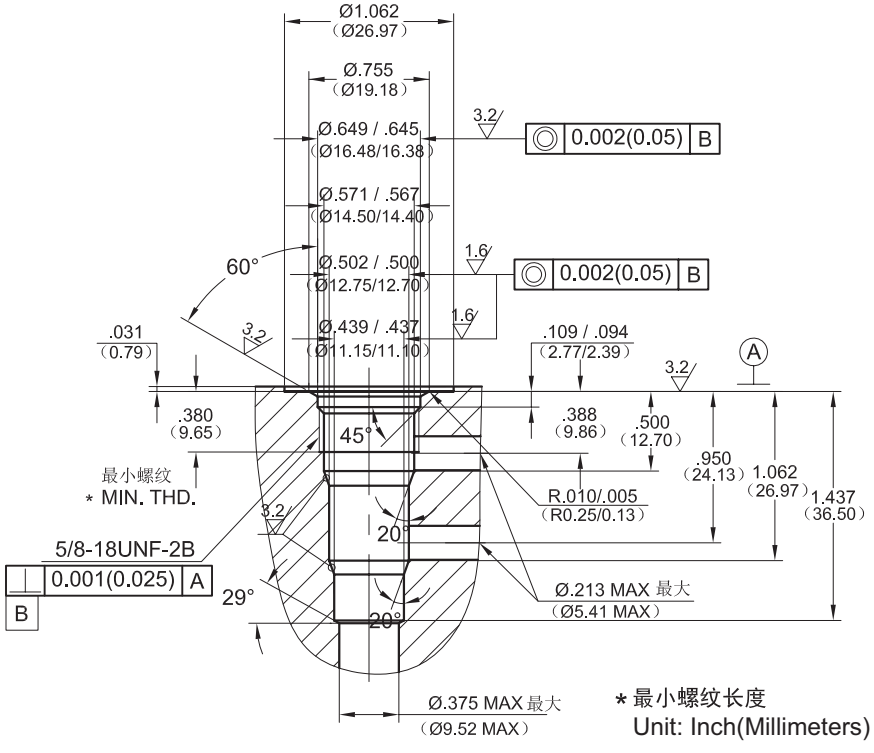

CAVITY: 07-3